USED ON
–

DWG NO. C-100360

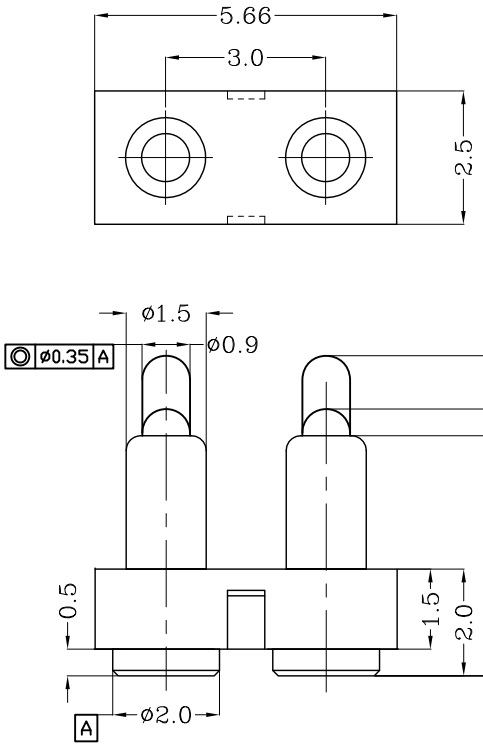


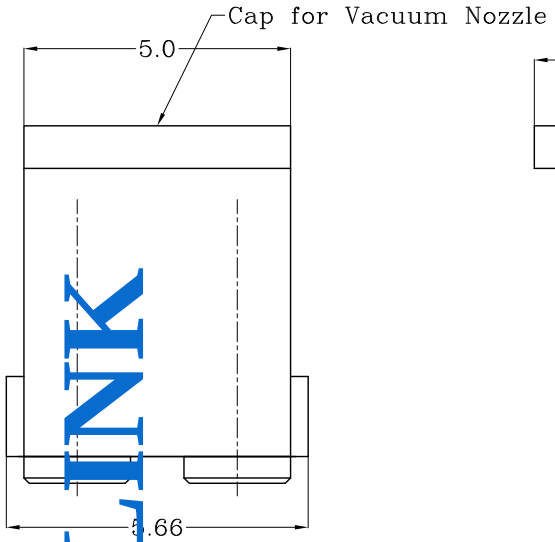


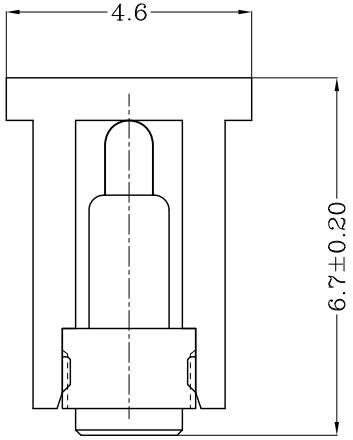


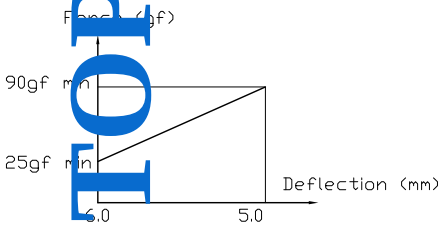


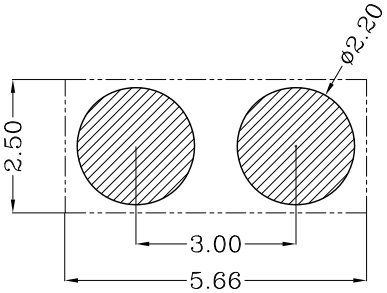


Recommended PCB Layout

Notes:

1 Material, Housing: PA 4.6 (30% Glass Filled)
Color Black.
Contact: Brass

2 Mechanical demands:
Plating Plunger: Min 0.4um Au over 1.4um Ni
Plating Body: Min 0.1um Au over 1.4um Ni.

THIS INFORMATION IS CONFIDENTIAL AND IS DISCLOSED TO YOU ON CONDITION THAT NO FURTHER DISCLOSURE IS MADE BY YOU TO OTHER THAN TOP-LINK PERSONNEL WITHOUT WRITTEN AUTHORIZATION FROM TOP-LINK LTD.

LOC –
DIST –

| LTR | REVISION RECORD | APVD | DATE |
|---|---|---|---|
| | 增标同轴度 | | 10'/09/09 |
| | NEW | | 09'/04/20 |

DIMENSIONS IN MM
TOLERANCES UNLESS OTHER SPECIFIED
0 = ±–
0.0 = ±0.15
0.00 = ±0.10
0.000 = ±–
ANGLE: ±1°
SURF TEXTURE: 3.2
REMOVE BURRS. BREAK SHARP EDGES R0.05 MAX
DO NOT SCALE PRINT

| | | | |
|---|---|---|---|
| MATL 1 | HT TR — | | FIN — |
| DWN Qin | APVD | top-link Electronics | Top-Link Electronics Ltd. |
| CHK | REL | | |
| NAME BATTERY POGO CONNECTOR 2 POSITIONS PGC-1.5-6.0-R-2P-3.0PH | | | |
| SCALE 1:1 | A4 | DWG NO. C-100360 | SHEET 1 OF 1 / REV A |

100360-2
PART NUMBER

TOP-LINK