USED ON
–

DWG NO. C-100601

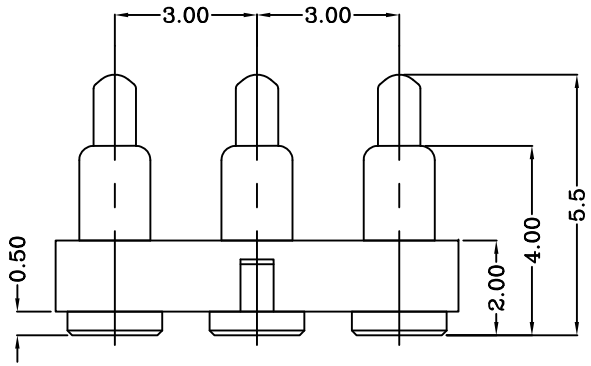

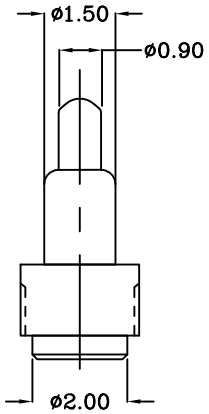

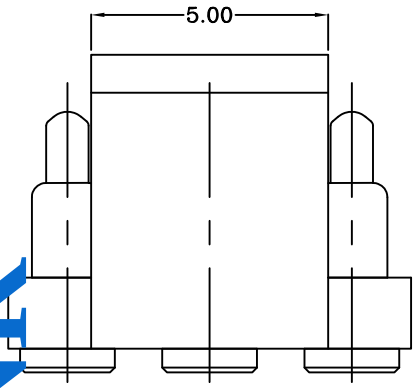

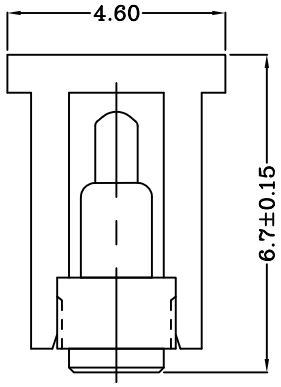

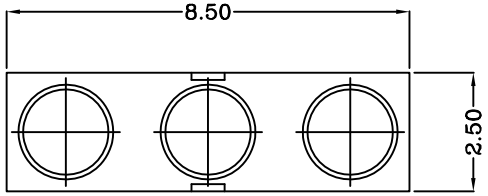

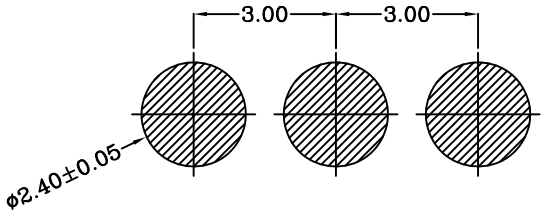

Recommended PCB Layout

TOP-LINK

Notes:
1 Material, Housing: PA 4.6 (30% Glass Filled)
Color Black.
Contact: Brass

2 Mechanical demands:
1)Plating Plunger: 0.4um Au over 1.4um Ni
2)Plating Body: 0.1um Au over 1.4um Ni.

3 Mechanic:
1)Force: 30±15gf per pin at 1.0mm stroke
2)Total stroke : 1.40mm
3)Durability: 10,000 cycle min.

4 Electrical
1)Contact resistance: 30mOhm Max.
2)Voltage rating: 36V DC Max
3)Current rating: 2.0A

100601-3
PART NUMBER

DIMENSIONS IN MM
TOLERANCES UNLESS
OTHER SPECIFIED
0 = ±-
0.0 = ±0.10
0.00 = ±0.10
0.000 = ±
ANGLE: ±1°
SURF TEXTURE: 3.2
REMOVE BURRS. BREAK
SHARP EDGES R0.05 MAX
DO NOT SCALE PRINT

MATL 1	HT TR —	FIN —	
DWN Qin	APVD	top-link Electronics	Top-Link Electronics Ltd.
CHK	REL		
NAME	POGO 3P PGC-1.5-5.5-R-3P-3.0PH		
SCALE 1:1	A4	DWG NO. C-100601	SHEET 1 OF 1	REV 2

LTR	REVISION RECORD	APVD	DATE
	Renovate		2010/05/27
	NEW		2010/05/13

LOC –
DIST –

THIS INFORMATION IS CONFIDENTIAL AND IS DISCLOSED TO YOU ON CONDITION THAT NO FURTHER DISCLOSURE IS MADE BY YOU TO OTHER THAN TOP-LINK PERSONNEL WITHOUT WRITTEN AUTHORIZATION FROM TOP-LINK LTD.